ERNST KRAEMER
& SÖHNE
EIN TEIL DER FRÖTEK-GRUPPE

Shaping the future of packaging

Ernst Kraemer & Söhne GmbH & Co. KG

Agenda

- Company history and affiliation
- Sustainability and material selection
- Sustainable closing / fastening of packaging
- Improvement of handling
- Special products
- Development
- Contact

Company history and affiliation

- Made in Germany since 1919
- Annual production of approx. 35 million parts
- Around 150 standard products

FRÖTEK Group

- Part of the FRÖTEK Group since 2017
- 9 production sites worldwide
- Approx. 800 employees

Sustainability & material selection

- 1991 first reusable closure for packaging
- 2017 concept for a sustainable product line
- 2018 introduction of E-K-S Bioline® - biological raw material based on sugarcane
- 2021 introduction of E-K-S Bioline® - biological raw material based on cellulose
- 2023 conversion of the first product line to 100% recycled material
- 2026 conversion of standard products to 100% recycled material

E-K-S bioline®

E-K-S Bioline®

Bio-based plastic made from sugar cane

- Material consists of at least 95% bio-based raw materials
  - Sugarcane – ISCC Plus certified
  - REACH compliant
- Reduction of CO_2 emissions by at least –4.0 kg CO_2eq / kg of material
- 100% mechanically recyclable with proper disposal
- Technical / mechanical properties of the products remain unchanged
- Coloring possible according to 45 E-K-S standard colors

E-K-S bioline®

E-K-S Bioline®

Biological raw material based on paper

- Material consists of at least 99% bio-based raw materials
  - e.g. cellulose and chalk
  - REACH compliant
- Natural appearance due to light brown standard coloring
- Biodegradable and industrially compostable according to DIN EN 13432

E-K-S bioline®

E-K-S Standard material

100% recycled content

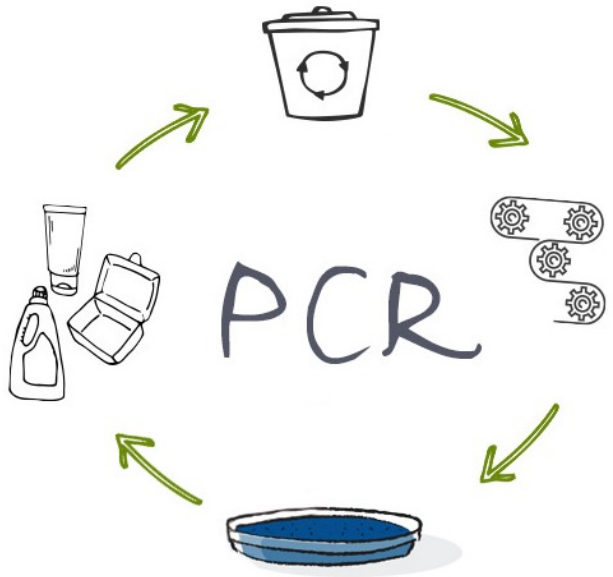

- Standard material consists of 100% recycled material for almost all products (> 35% PCR-Anteil)
  - REACH compliant
- Reduction of CO2 emissions by approx. 1.20 kg CO2eq / kg material
- 100% mechanically recyclable if disposed of properly
- The technical/mechanical properties of the products remain unchanged

Sustainable closing / fastening of packaging

- E-K-S Bayonet Lock
- E-K-S Corruloc
- E-K-S Box Latch
- E-K-S Clamping fastener/lock
- E-K-S Corra-Screw

E-K-S Bayonet lock

- Available connection distances
  - 8mm, 14mm, 15mm, 18mm, 21mm, 22mm or 26mm
- Easy and fast opening and closing of packaging
- Facilitates material-specific separation of packag materials

E-K-S Bayonet lock

Example application (Filtration plant)

E-K-S Bayonet lock

Example application (E-K-S Prototype box)

E-K-S Corruloc

- Available connection distances
  - 7mm or 15mm
- Easy opening and closing of packaging
- After assembly, the E-K-S Corruloc remains securely in the packaging
- Ideal for hollow-chamber packaging

E-K-S Corruloc

Example application

E-K-S Box Latch

- Available connection distances
  - 6mm, 8mm or 14mm
- Quick opening and closing
- Optional with locking anchors
- No punching required

E-K-S Box Latch

Example application

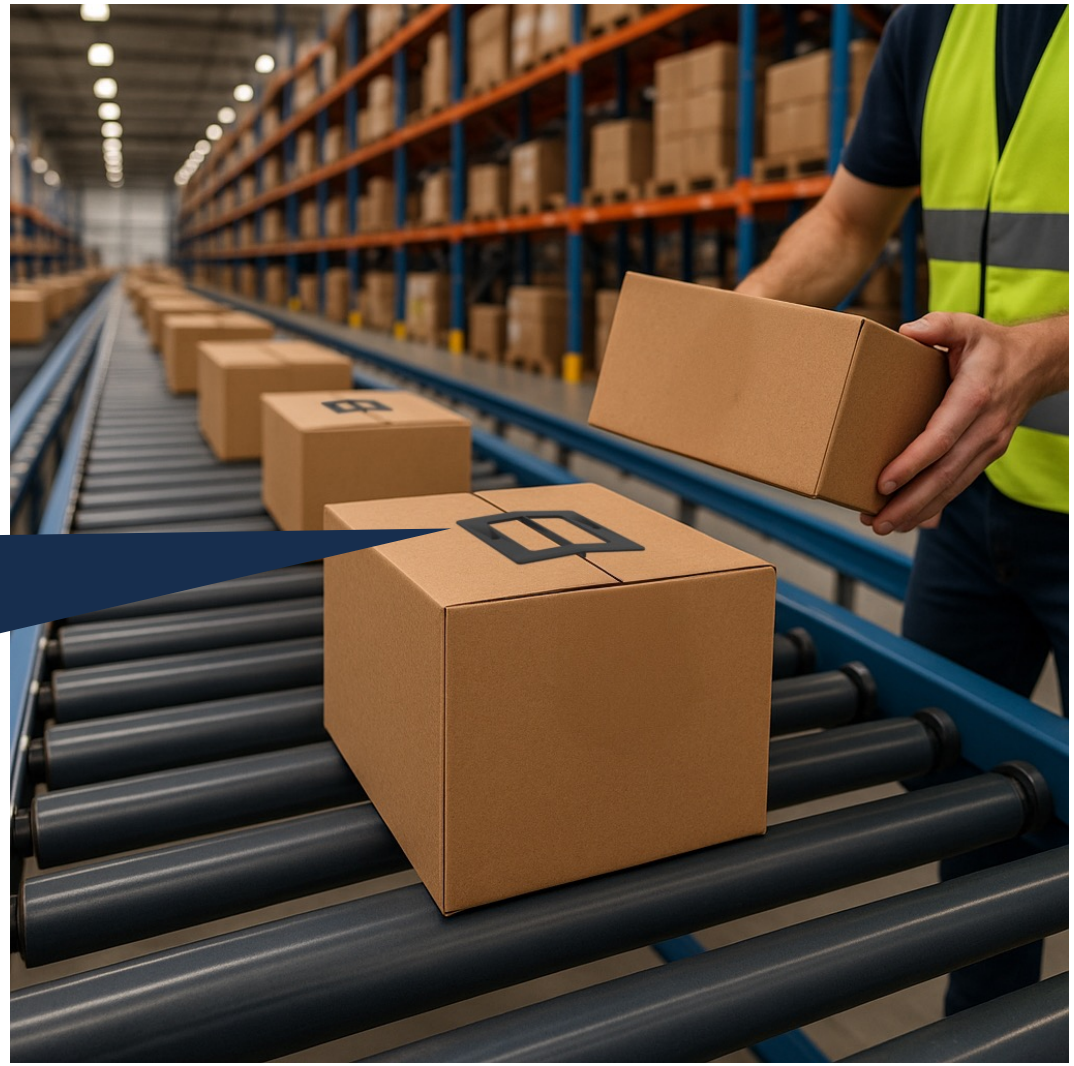

E-K-S Box Latch

Example application (Fulfilment-Center)

E-K-S Clamping fastener/lock

- Available connection distances
  - e. g. 15,5mm, 16,5mm or 27,5mm
- Quick opening and closing of packaging
- Facilitates the clean separation of packaging materials

E-K-S Clamping fastener/lock

Example application (Bike packaging)

E-K-S Clamping fastener/lock

Example application (Pallet box)

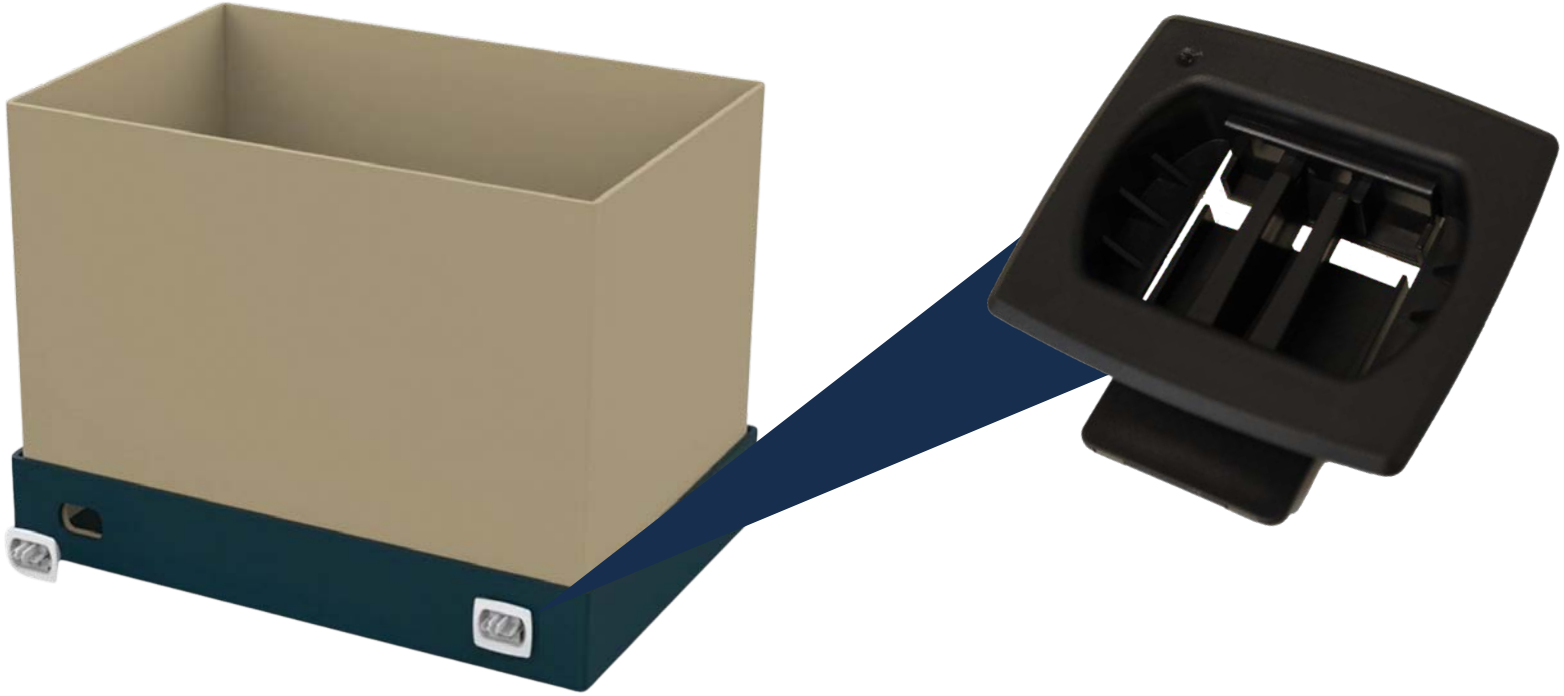

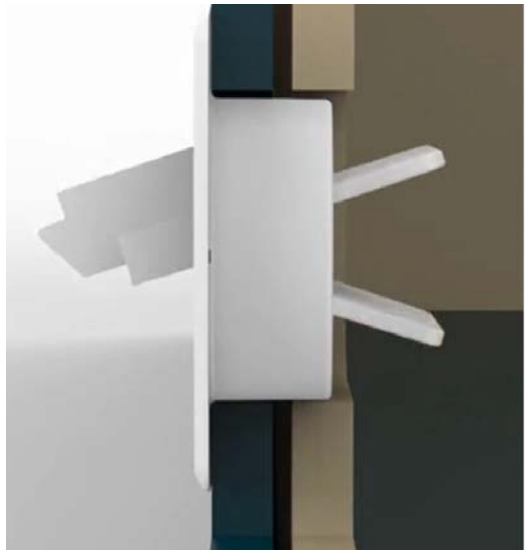

E-K-S Corra-Screw

- Available connection distances
  - 14mm or 27mm
- Quick opening and closing of packaging
- No punching required

E-K-S Corra-Screw

Example application (Pallet box)

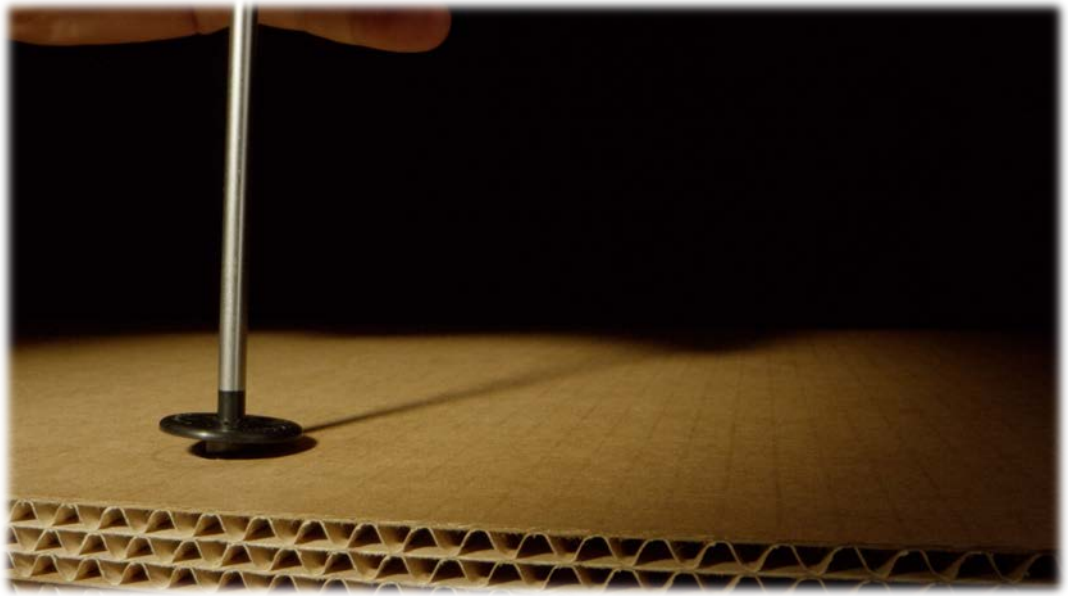

ERNST KRAEMER
& SÖHNE
EIN TEIL DER FRÖTEK-GRUPPE
E-K-S Corra Screw

Improvement of handling
through sustainable handles

- E-K-S Standard handles
- E-K-S Heavy duty handles
- E-K-S Loop handles
- E-K-S Hand hole reinforcements
- E-K-S Paper handles

E-K-S Standard handles

- Available in various lengths
- For different load capacities (up to 35kg per handle)
- Available from stock

E-K-S Standard handles

Example application (Men's handbag)

E-K-S Heavy duty & Loop handles

- Available in various lengths
- For different load capacities (up to 75kg per handle)
- Especially for bulky / heavy packaging
- Available from stock

E-K-S Heavy duty & Loop handles

Example application (Dangerous goods packaging)

E-K-S Heavy duty & Loop handles

Example application (Printer packaging)

E-K-S Hand hole reinforcements

- Available for different wall thicknesses
- Prevents tearing of the cardboard
- Increases carrying comfort
- Available from stock

E-K-S Paper handles

- Available in different lengths
- For different load capacities (up to 15kg per handle)
- 100% recyclable in the packaging recycling process

E-K-S Paper handles

Example application (Sample box)

E-K-S Paper handles

Example application (Screw packaging)

Special Products and Development

- E-K-S Square timber fixation
- E-K-S Edge guard
- E-K-S Pallet fixation
- POS accessories
- E-K-S Development department / Toolmaking

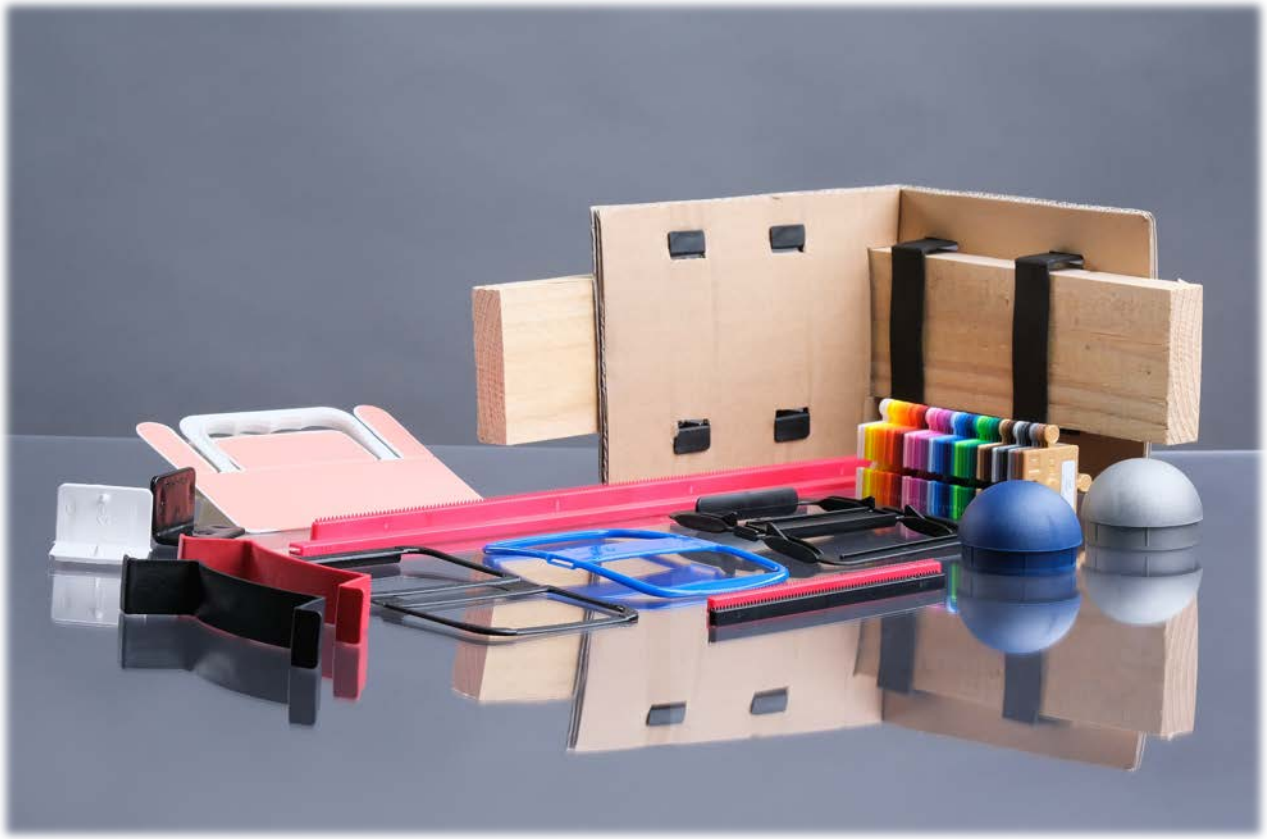

E-K-S Square timber fixation

- For securing wooden battens 80 mm × 20 mm
  - (also available for wooden battens of other sizes upon request)
- High load-bearing capacity

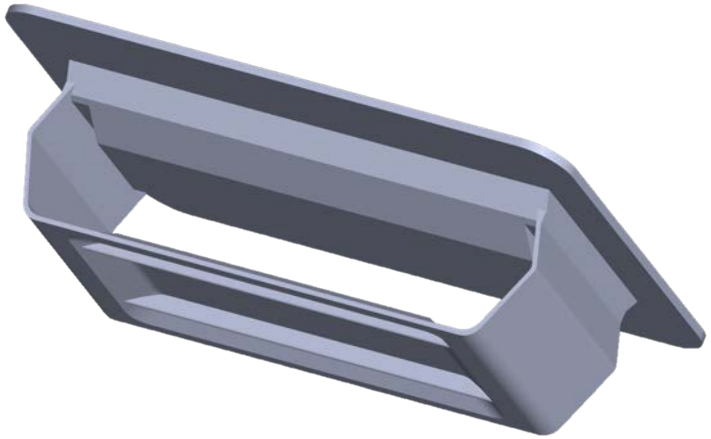

E-K-S Square timber fixation

Example application (Tracking Wheel)

E-K-S Square timber fixation

Example application (Tracking Wheel)

E-K-S Edge guard

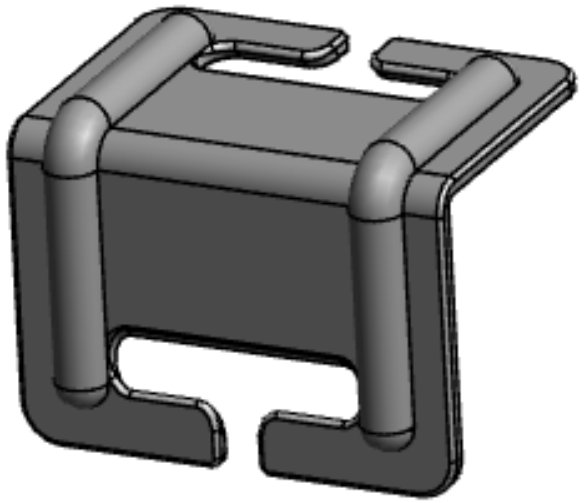

- Protects the packaging during the strapping process

- Available in the following versions
  - Without fixing pin
  - With fixing pin
  - With strap guide

E-K-S Pallet fixation

- Used for the sustainable and easily separable fixation of pallet boxes / packaging on a base plate
- Fixed to the pallet using nails or staples
- Facilitates material-specific separation

E-K-S Pallet fixation

Example application

E-K-S POS accessories

- Serves as a vertical reinforcement and/or connecting element for POS corrugated cardboard displays
- Attached to the side wall of the POS corrugated cardboard display
- Mounted on two opposite sides

E-K-S POS accessories

Example application

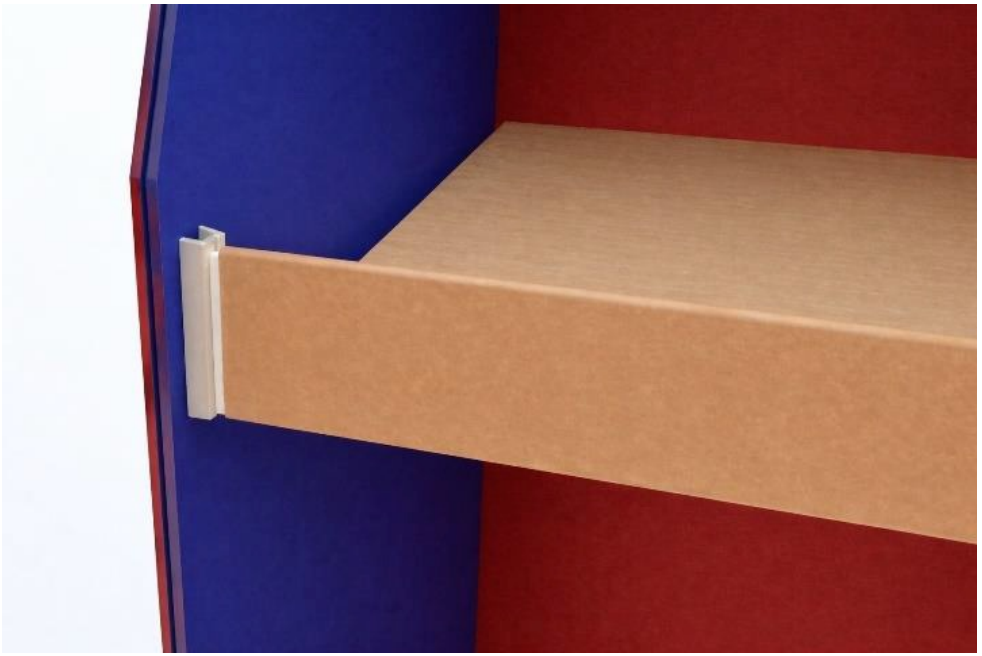

E-K-S Development department / Toolmaking

Idea

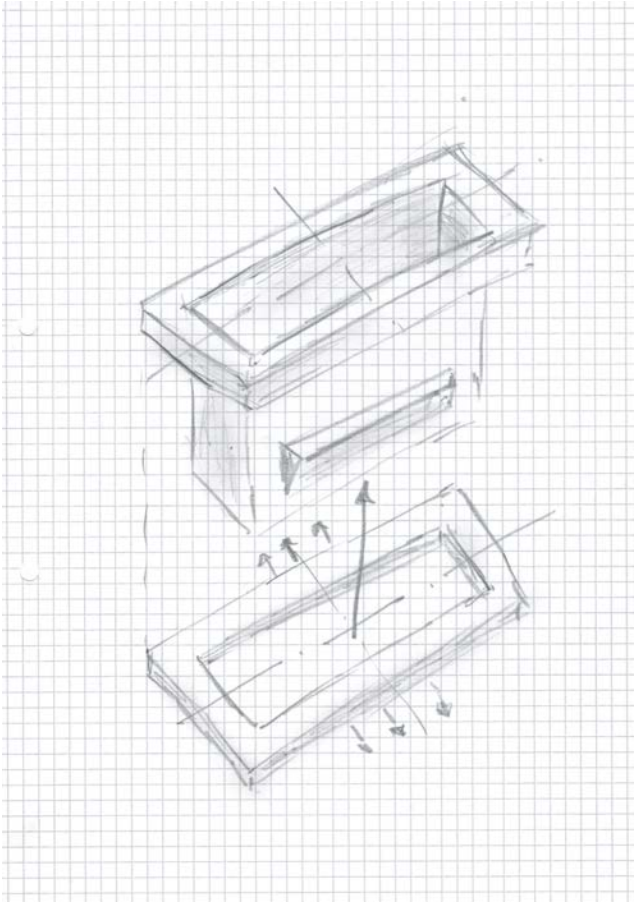

E-K-S Development department / Toolmaking

Design

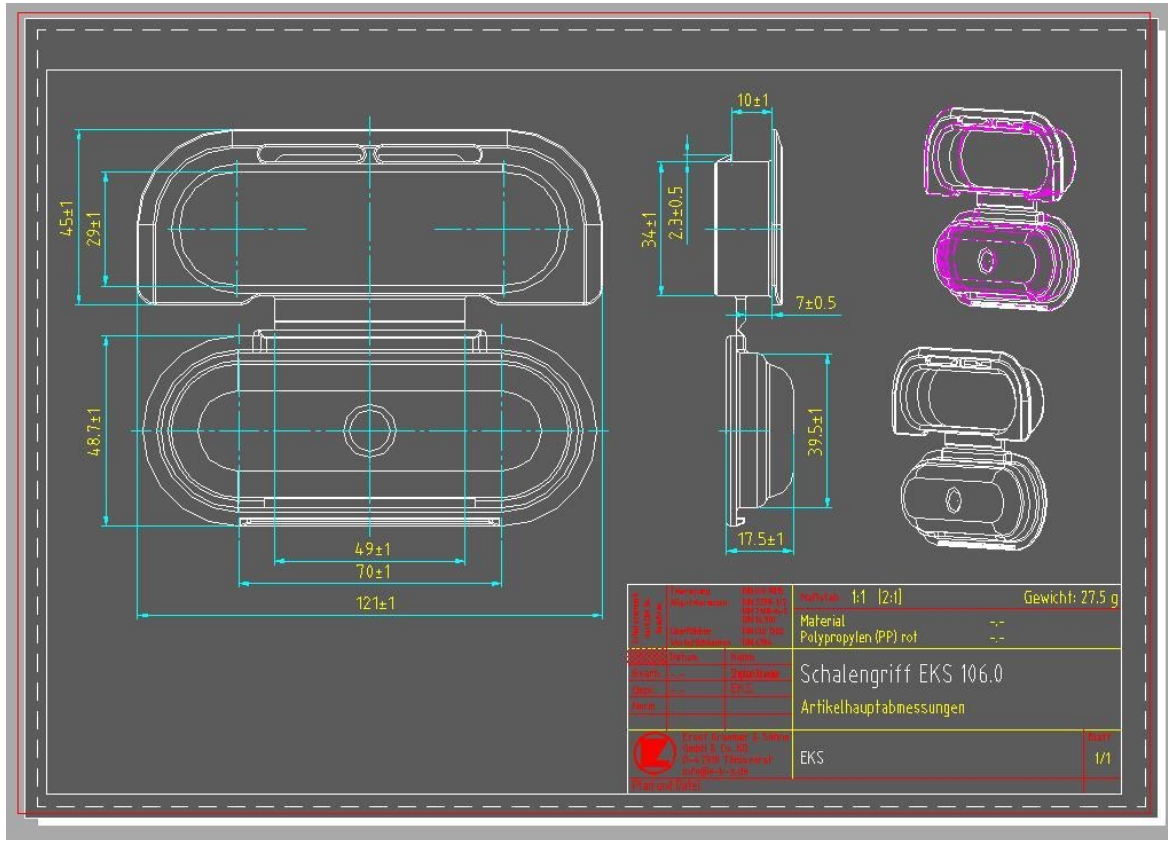

Contact

Florian Banse
Vice President Sales

Mobil: +49 160 9779 3919
E-Mail: florian.banse@e-k-s.de

Ernst Kraemer & Söhne GmbH & Co. KG
Feldburgweg 107
47918 Tönisvorst
www.e-k-s.de